IMO

M12 Inductive DC Proximity Switches

AM1 / AM6

Compact inductive proximity switches for DC operation

- ø12 x 50mm and ø12 x 43.5mm
- Shielded and unshielded models
- IP67 nickel-plated brass housing
- Short-circuit protection
- LED status indicator 360˚ visible
- 2 wire DC (AM1)
- Additional cable exit options available
- Nominal sensing range shielded 2mm
  Unshielded 4mm
- Long distance AM1 shielded 4mm
  Unshielded 8mm

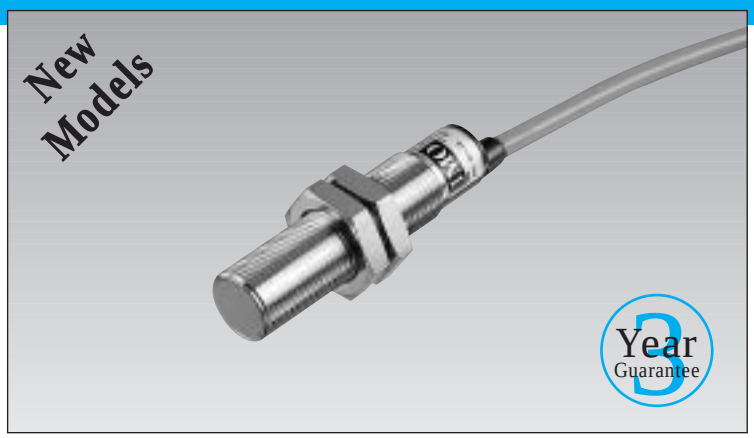

Options and ordering codes

AM1 / AN – 1A

Standard proximity	AM1
ø12mm short version	AM6
NO output state	A
NPN output type	N
PNP output type	P
2 wire AM1 only	O
Shielded	1
Unshielded	2
Standard cable exit	A
M12 plug cable exit	H

PRICE INFORMATION AND ORDERING

Output circuit–wiring connections

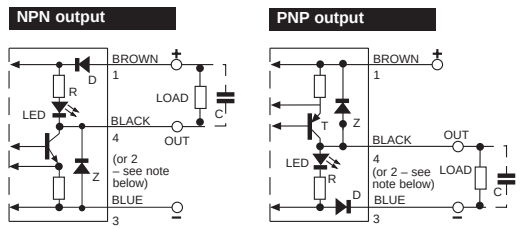

NOTE: in case of combined load, i.e. resistive and capacitive, the maximum admissible capacity (C) is 0.05µF for maximum output voltage and current.

Normally closed output types
UL approved models
Other cable options:
Right angle cable
M8 Plug cable exit
Customised cables
Please contact IMO for price and availability

Plug-pin connections

M12 plug connector

Cable exit option H

NOTE: (pin connections): At present, all plug exit sensors have the output on pin 4. According to EEC Directives, the output of NC plug exit models will be changing to pin 2 (NO will remain on pin 4). A plug cable to match these NC sensors MUST be a 4-wire type as 3-wire cables are connected to pins 1, 3 and 4 – contact IMO to check stock types.

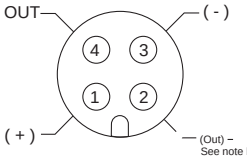

Please see – Full specification page 321
Mounting brackets page 332
Connector leads page 330

Dimensions (mm)

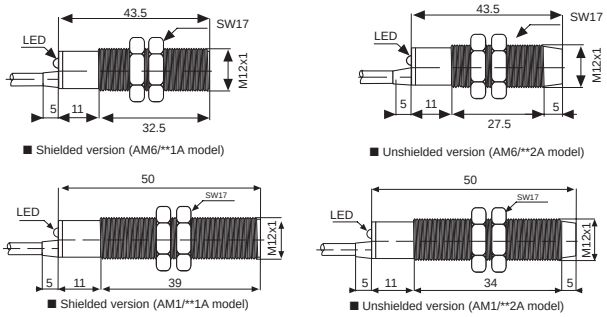

■ Shielded version (AM6/**1A model)
■ Unshielded version (AM6/**2A model)
■ Shielded version (AM1/**1A model)
■ Unshielded version (AM1/**2A model)

Standard cable exit Option A
Cable: ø3.75mm, 2m length, 0.34mm² conductor section, PVC material

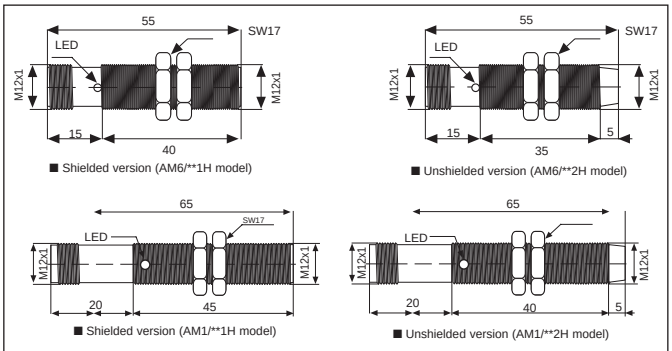

■ Shielded version (AM6/**1H model)
■ Unshielded version (AM6/**2H model)
■ Shielded version (AM1/**1H model)
■ Unshielded version (AM1/**2H model)

M12 metal plug cable exit Option H