599 Menlo Drive, Suite 100
Rocklin, CA 95765, USA
Office: (916) 624-8333
Fax: (916) 624-8003

General: info@parallax.com
Technical: support@parallax.com
Web Site: www.parallax.com
Educational: www.stampsinclass.com

BASIC Stamp® BS2sx-IC MODULE Rev. D

Updated 6-14-04 © Parallax, Inc.

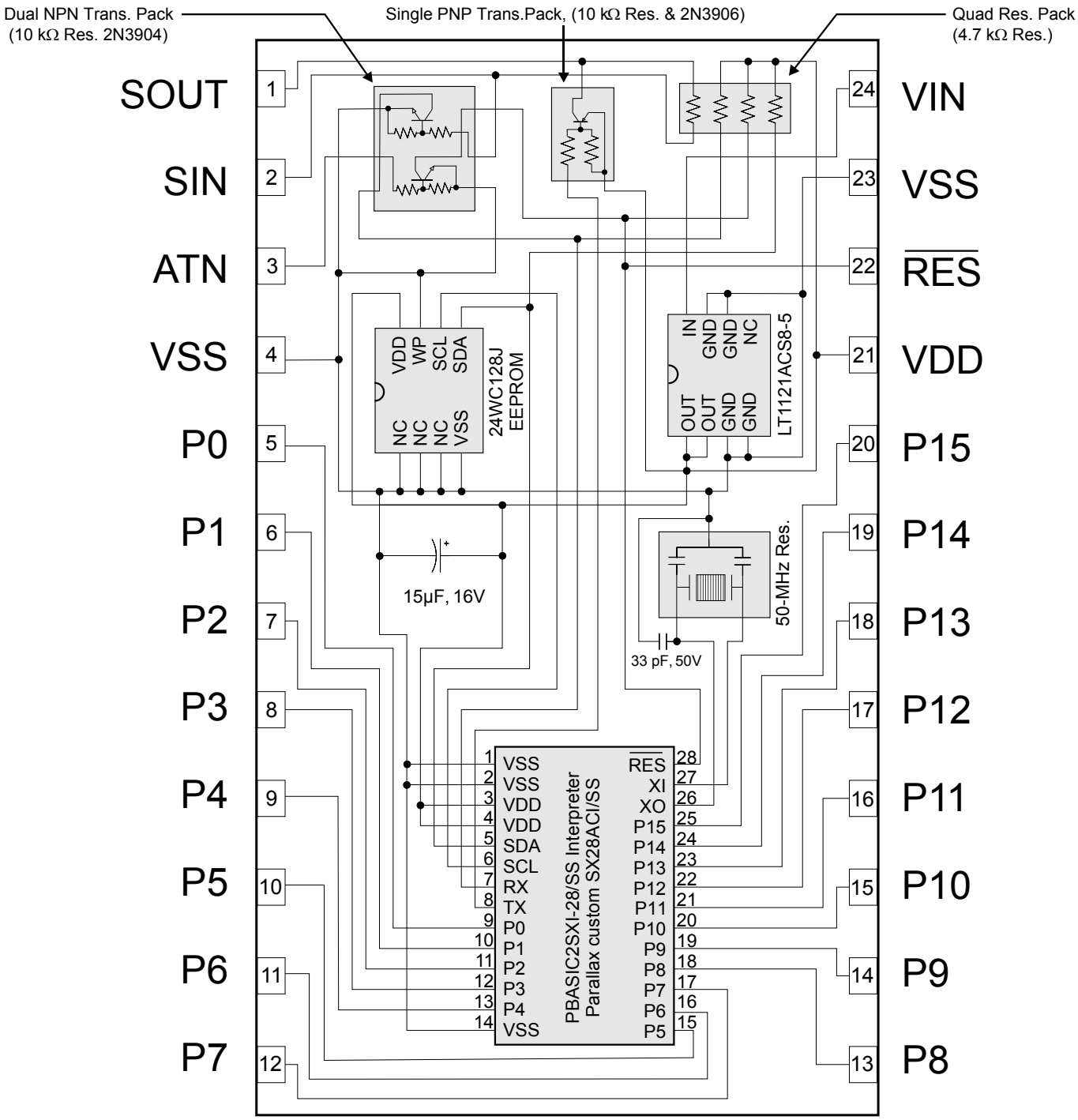

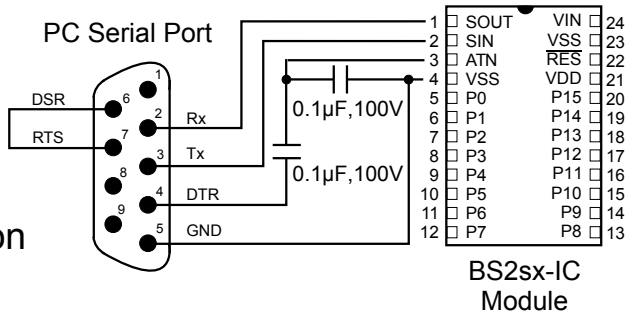

Connect DSR and RTS for automatic port detection.

PC - to - BS2sx-IC connection