VF320

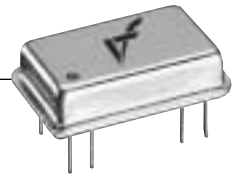

ECLinPS™ Compatible Very High Frequency Clock Oscillator

FEATURES

- Very High Frequency Range
- Enable/Disable Output
- Industrial Temperature Range
- High Frequency Fundamental Crystal Technology
- Low Phase Jitter
- Complementary Output Standard

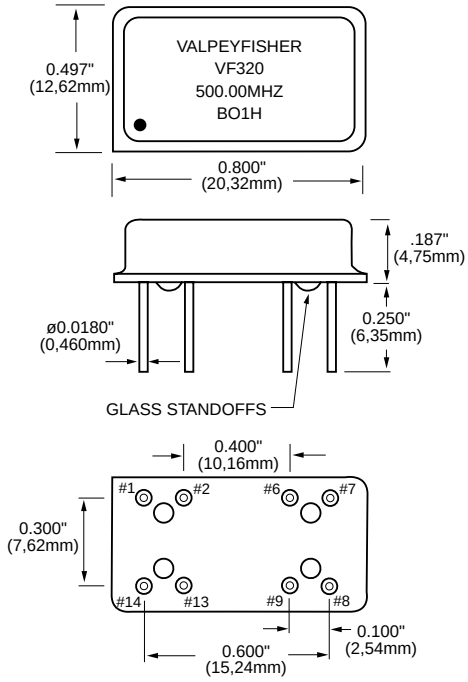

All dimensions are typical unless otherwise specified.

	Parameter	Symb	Condition	Min	Typ	Max	Unit	Note
Absolute Max. Ratings	Input Break Down Voltage	Vcc		–0.5		7.0	V	
	Storage Temp.	Ts		–55		+125	°C	
Electrical	Frequency Range	F		250		630	MHz	
	Frequency Stability	ΔF/F	Overall Conditions Including: Calibration, temp., aging 10 yrs. shock, vibration			±100	ppm	1
	Input Voltage	Vcc		4.75	5.00	5.25	V	
	Input Current	Icc	50 Ohm Load			120	mA	
	Load	50 Ohm to Vcc–2V or Thevenin Equiv. Bias required						
	Duty Cycle		@50%	45	50	55	%	2
	Rise/Fall Time	Tr/Tf	20% to 80%			0.5	ns	
	Logic "1" Level	Voh	@Vcc = 5.0V	4.04		4.19	V	
	Logic "0" Level	Vol	@Vcc = 5.0V	3.15		3.25	V	
	Start–up Time	Ts			2	10	ms	
	Phase Jitter		1σ		10		ps	fj>1KHz
	Enable/Disable Function	Control input "Vee" or floating – Enable Control input "High" – Disable Low						
Environmental and Mechanical	Operating Temperature Range	0°C to +70°C, (–40°C to +85°C available)						
	Mechanical Shock	Per MIL–STD–202, Method 213, Cond. E						
	Thermal Shock	Per MIL–STD–883, Method 1011, Cond. A						
	Vibration	Per MIL–STD–883, Method 2007, Cond. A						
	Soldering Conditions	260°C, for 10s, Max.						
	Hermetic Seal	Leak rate less than 5 x 10^{-8} atm.cc/s of helium						
Electrical Connections	Pin Out	Pin #1–Vcc Pin #7–Complementary Output Pin #14–Enable/Disable Control	Pin #2,#6,#9,#13–Ground, Case Pin #8–Output					

Notes:
1. Standard frequency stability (±20, ±25, ±50, others available).
2. Tighter duty cycle available. Measure @50% of the voltage swing.

All specifications are subject to change without notice.

Creating a Part Number

VF320 □□ - □□ - **FREQ.**

FREQUENCY STABILITY	
Code	Specification
S	±20 ppm
A	±25 ppm
B	±50 ppm
	±100 ppm (std.)

DUTY CYCLE	
Code	Specification
HH	±2.5%
	±5% (std.)

LEAD CONFIGURATION	
Code	Specification
G	Gull Wing
	Through Hole (std.)

OPERATIONAL TEMP. RANGE	
Code	Specification
	0°C to +70°C (std.)
1	-40°C to +85°C

Example: VF320SHH-1-500MHz: Frequency Stability ±20ppm, Duty Cycle ±2.5%, Input Voltage 5.0 Volt ±5%, Operating Temperature -45°C to +85°C, Complementary Output, Frequency 500.000MHz.